NEW: Roller garage door RollMatic T

Premium quality with compact tubular operator

HÖRMANN

Details perfectly matched to each other

The roller garage door RollMatic T with its proven technology creates more room in front of and inside the garage. The door curtain is guided via a guide roll and guide channels and impresses with quiet door travel.

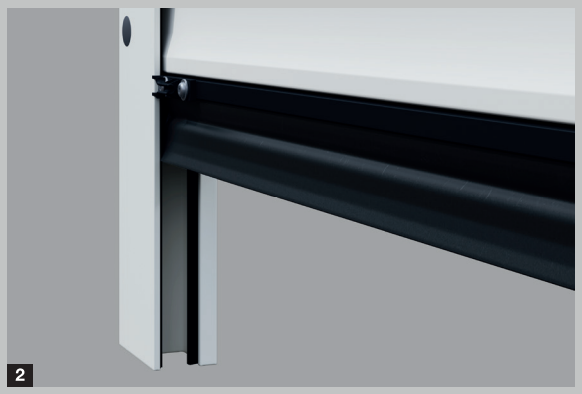

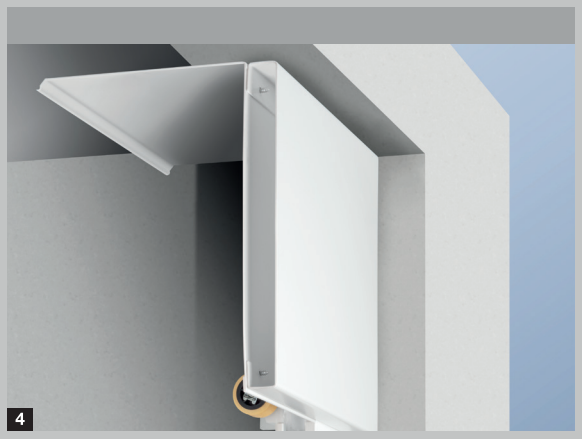

A well protected shaft 1

The standard shaft cover practically prevents reaching into the door barrel. In addition, it protects the curtain from damage and dirt when the door is open. For coloured doors, the cover matches the door curtain. With Decograin and Decopaint doors, the cover is supplied in the base colour of the timber design.

Space-saving design 2

The compact door design with tubular operator for door heights up to 2300 mm needs only 290 mm required headroom and a side room of only 75 mm or 105 mm from 3001 mm door width and is also suited to particularly narrow fitting conditions. The side guides with standard backfill cater for quiet door travel and are optimally sealed through the standard brush seal.

Easily fitted

The RollMatic T is quick and easy to fit. The pre-fitted shaft including covering and the predrilled side guides with standard backfill are bolted to the garage walls and lintel.

Emergency operation as standard 3

The RollMatic T can be easily opened from the inside in the case of a power cut by using the standard emergency crank handle. With the optional external emergency operation, you can open your door with a crank handle from the outside. The crank handle is attached in an opening, that is lockable with a locking cylinder. The door can be operated from the inside via the divisible linkage.

Additional fascia panel 4

The additional fascia panel stabilises the fascia panel for fitting in the opening or behind the opening if the fascia panel can be seen in the opening. It harmoniously complements the lintel without any unattractive fitting holes. The additional fascia panel is available in the colour of the door or with a Decograin surface.

Harmonious overall appearance A

The exterior of the roller garage door RollMatic T is characterised by its even profiles. For a harmonious door appearance the curtain cover and the side guides are always delivered in the same colour as the door. For Decograin and Decopaint surface finishes the curtain cover and the side guides are always delivered in the basic colour of the timber design.

Decograin surface finish B

The Decograin decors have a convincingly real timber look. A special abrasion-resistant surface protection preserves the UV-resistant plastic film coating on the profiles over a long time.

Decopaint surface finish C

The Decopaint decors are an inexpensive alternative to the Decograin surface finishes. The interior and exterior of the profiles are painted to look like timber.

Glazing elements and ventilation grilles D

Get more daylight in your garage or improve the ventilation and prevent mould. The glazing elements with synthetic panes or ventilation grilles made of long-lasting plastic are arranged across the entire profile width.

16 colours and 4 decors in timber look

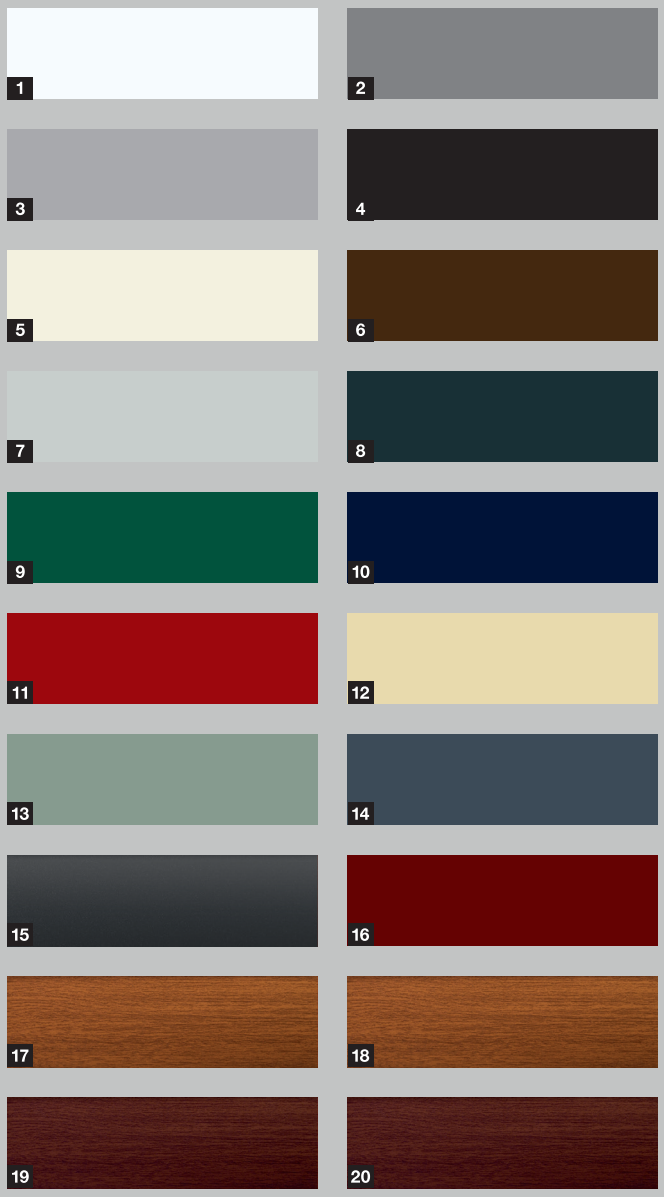

1	RAL 9016	Traffic white	2	RAL 9007	Grey aluminium
3	RAL 9006	White aluminium	4	RAL 9005	Jet black
5	RAL 9001	Cream	6	RAL 8028	Terra brown
7	RAL 7035	Light grey	8	RAL 7016	Anthracite grey
9	RAL 6005	Moss green	10	RAL 5011	Steel blue
11	RAL 3003	Ruby red	12	RAL 1015	Light ivory
13	Chartwell Green		14	RAL 7015	Slate grey
15	Noir 2100 Sablé		16	RAL 3004	Purple red
17	Decograin Golden Oak		18	Decopaint Golden Oak	
19	Decograin Rosewood		20	Decopaint Rosewood	

1

Space saving tubular operator 1

The high-performance tubular operator is equipped with mechanically adjustable end-of-travel positions. Optionally the operator is available with electronic travel limit safety cut-out. The RollMatic T is supplied with stylish control, over which the operator can be controlled from the inside. The integrated LED lighting provides excellent illumination inside the garage.

Closing edge safety device as standard 2

An optosensor in the bottom seal monitors the closing edge according to DIN EN 13241 and it reliably stops the door when there is an unexpected obstacle. Optionally a wireless closing edge safety device is available without spiral cable 3.

Radio control as standard

Conveniently control your door with the two standard hand transmitters and their tried and tested radio system. Optionally the particularly secure BiSecur radio system with the two hand transmitters HSE 4 BS is available.

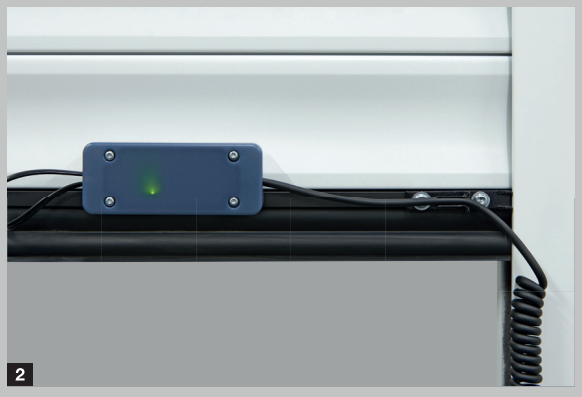
2

3

Standard radio system with
2 button hand transmitter

Optional BiSecur radio system with
4 button hand transmitter HSE 4 BS

Internal roller garage door

Fitting behind the opening, view of fitting side

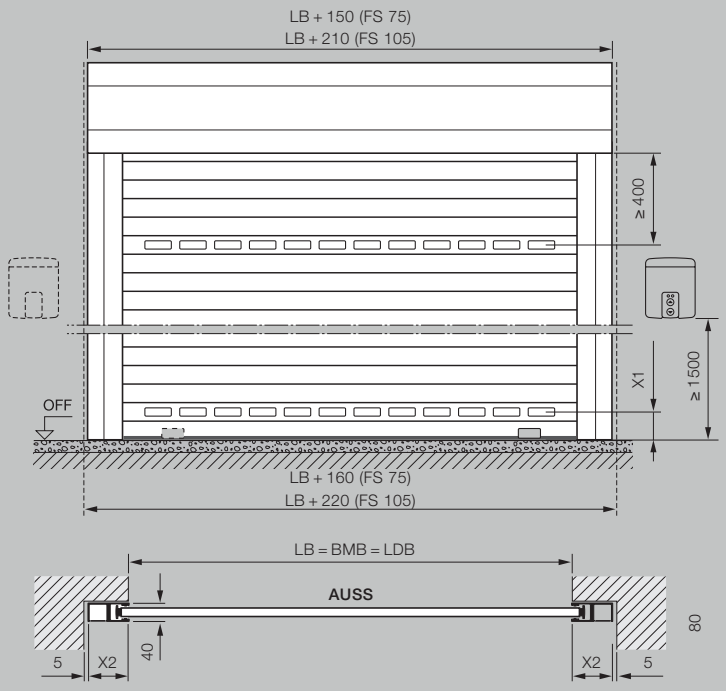

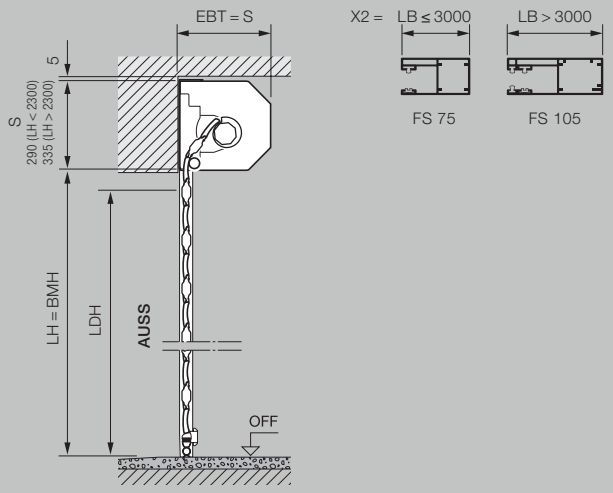

Internal roller garage door

Fitting in the opening, interior view

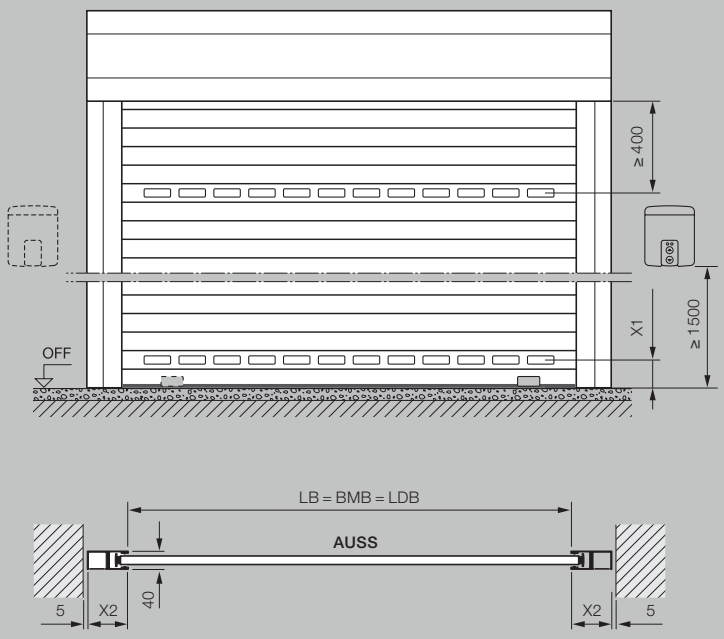

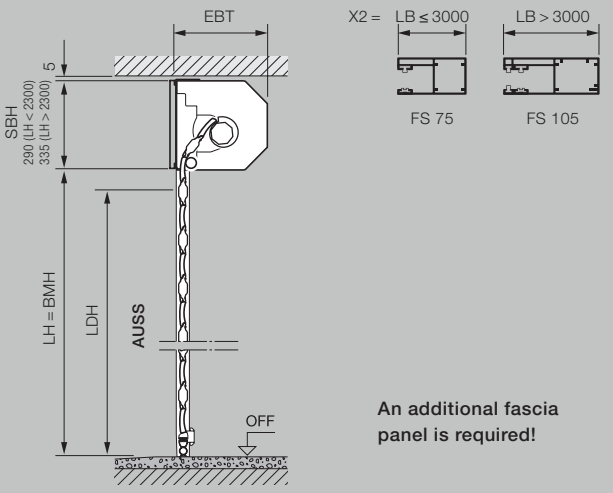

An additional fascia panel is required!

Size range for internal and external roller garage door

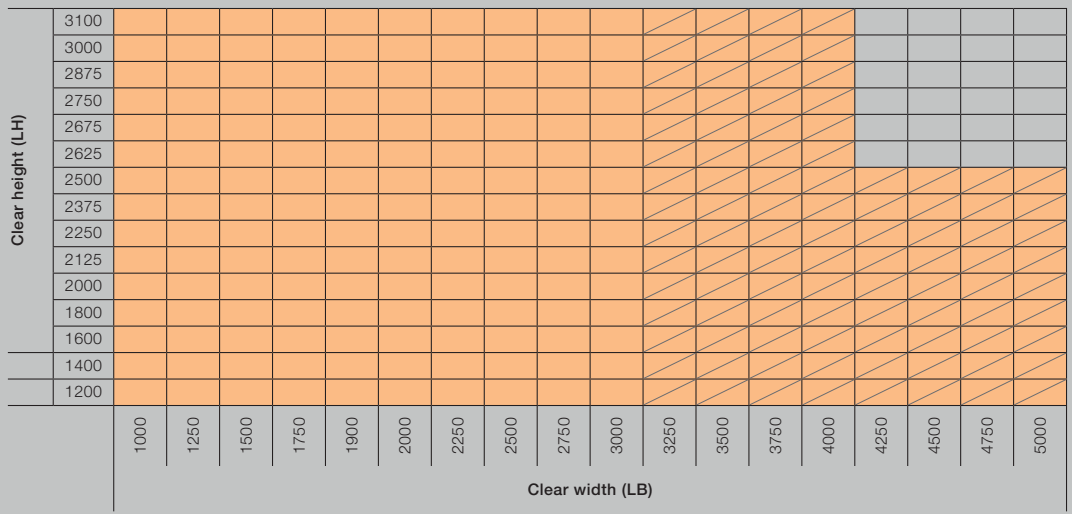

With side guide FS 75 without wind lock

With side guide FS 105 and wind lock

Dimensions in mm

External roller garage door

Fitting in front of the opening, view of fitting side

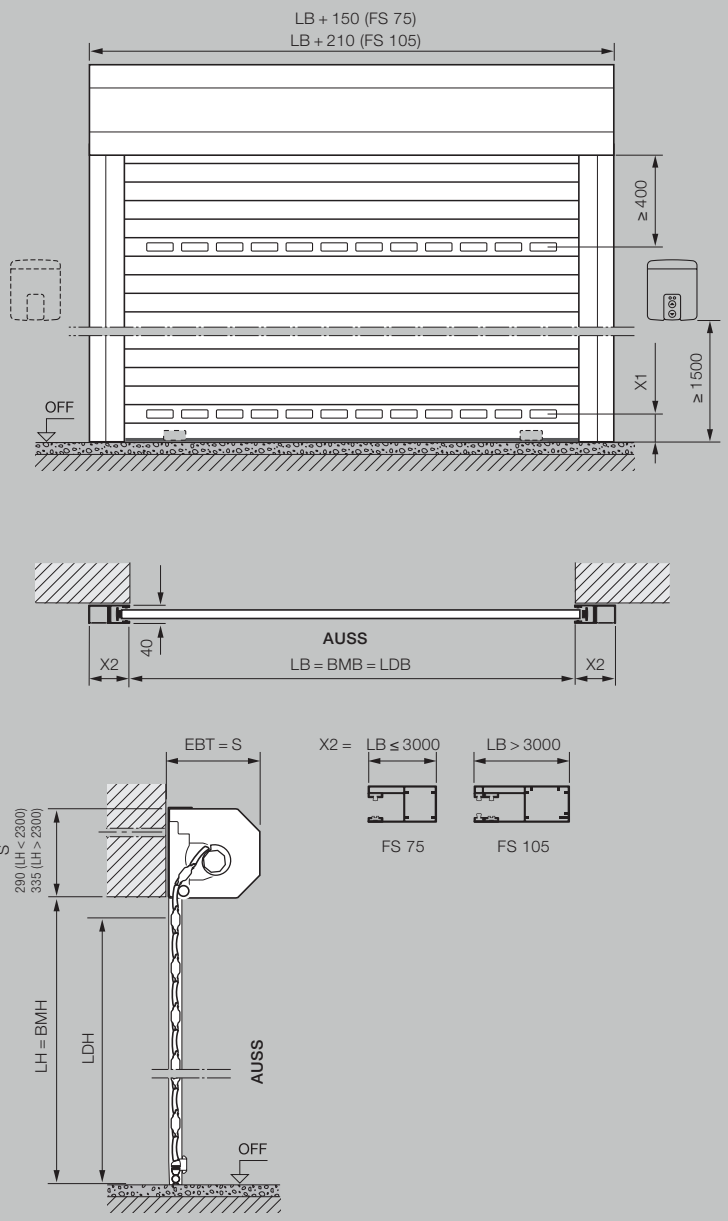

Additional fascia panel

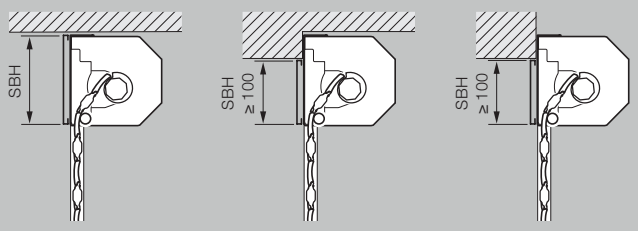

Internal roller garage door
Fitting behind the opening,
view of fitting side

Internal roller garage door
Fitting in the opening,
view of interior fitting side

External roller garage door
Fitting in front of the opening,
view of fitting side

Explanations

BMB	Ordering size width
BMH	Ordering size height
LB	Clear width
LH	Clear height
LDB	Clear passage width
LDH	Clear passage height
EBT	Fitting depth
S	Required headroom
SBH	Additional fascia panel height
OFF	Finished floor level
AUSS	Exterior
X1	at least 150 mm
X2	LB ≤ 3000 = 75 mm (FS 75) LB > 3000 = 105 mm (FS 105)

Fitting depth EBT

Up to 2300 mm door height	290 mm
From 2301 mm door height	335 mm

Required headroom S / additional fascia panel SBH

Up to 2300 mm door height	290 mm
From 2301 mm door height	335 mm

Clear passage height / clear passage width LDH / LDB

Height (FS 75)	LH – 70 mm
Height (FS 105)	LH – 110 mm
Width	LB

Required sideroom

Up to door widths of 3000 mm	80 mm
From door widths of 3001 mm	110 mm

Wind load classes

Without wind lock	
up to LB = 3000 mm	Class 3
With wind lock	
up to LB = 4000 mm	Class 4
up to LB = 4500 mm	Class 3
up to LB = 5000 mm	Class 2

Hörmann: Quality without Compromise

Hörmann KG Amshausen, Germany

Hörmann KG Antriebstechnik, Germany

Hörmann KG Brandis, Germany

Hörmann KG Brockhagen, Germany

Hörmann KG Dissen, Germany

Hörmann KG Eckelhausen, Germany

Hörmann KG Freisen, Germany

Hörmann KG Ichtershausen, Germany

Hörmann KG Werne, Germany

Hörmann Alkmaar B.V., Netherlands

Hörmann Legnica Sp. z o.o., Poland

Hörmann Beijing, China

Hörmann Tianjin, China

Hörmann LLC, Montgomery IL, USA

Hörmann Flexon LLC, Burgettstown PA, USA

Shakti Hörmann Pvt. Ltd., India

Hörmann is the only manufacturer worldwide that offers you a complete range of all major building products from one source. We manufacture in highly-specialised factories using the latest production technologies. The close-meshed network of sales and service companies throughout Europe, and activities in the USA and Asia, make Hörmann your strong partner for first-class building products, offering “Quality without Compromise”.

GARAGE DOORS

OPERATORS

INDUSTRIAL DOORS

LOADING EQUIPMENT

HINGED DOORS

DOOR FRAMES

Issue 09.2020 / Print 09.2020 / HF 87515 EN / PDF www.hoermann.com

HÖRMANN